Lightway

UL WET LISTED LED WALL PACKS

DX Series



ARCHITECTURAL EXTERIOR LIGHTING

Four shielded profiles for façades, entrances and perimeter walls. Choose the finish, light color and controls to suit the site.

24 W **3,200 lm** **90 CRI**

28435 Industry Drive., Valencia, California 91355
800-325-4448 / 661-257-0286
www.lightwayind.com • sales@lightwayind.com

MODELS & SPECIFICATIONS

Four fixture profiles

OVERALL DIMENSIONS / WIDTH × HEIGHT × DEPTH



DXBW

Curved face with light accent

18″ × 8″ × 6″



DXAW

Curved shield

18″ × 8″ × 6″



DXRW

Pyramidal shield

18″ × 14″ × 6″



DXTW

Trapezoidal shield

15¾″ × 8″ × 6½″

Construction & electrical

Housing	Steel housing and chassis
Lens	Clear prismatic polycarbonate
Mounting	Integral mounting plate
Driver	Universal 120/277 V standard
CCT choices	3000K, 3500K, 4000K, 5000K
Listing	UL Wet Listed

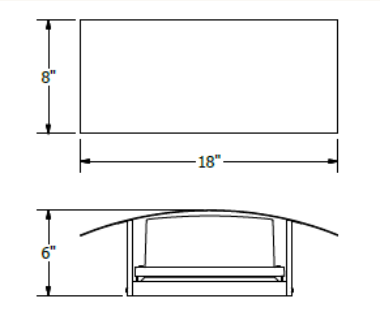

DXBW dimension drawing

Project options

Battery backup
Supports path-of-egress lighting.

0–10 V dimming
Specify control requirements when ordering.

Top cover
Helps limit uplight for dark-sky projects. Confirm the qualifying configuration.

Photocell
Enables dusk-to-dawn operation.

All-aluminum construction
Available for demanding environments.

BABA-compliant configurations

Configurable finishes and options

5-year LED component warranty

APPLICATIONS

Lighting for exterior spaces

For commercial façades, hospitality entries and parking areas, industrial and institutional exteriors, retail perimeters, and community or campus projects with dark-sky requirements.



DXRW / OFFICE FAÇADE



DXAW / BRANCH ENTRY



DXTW / ENTERTAINMENT VENUE



DXBW / COMMERCIAL ENTRY



DXTW / FIXTURE DETAIL

ADDRESS LIGHTING & FINISHES

Make the entrance easy to find



DXBW-ADDRESS (left) / DXBW (right)

Specify the optional DXBW-ADDRESS at entrances and parking approaches where illuminated numbers help visitors locate the building.

Finish options

STANDARD

- Satin Black
- Gloss White
- Anodized Silver
- Satin Bronze
- Textured Bronze
- Brushed Nickel Powder

OPTIONAL

- Textured Black
- Textured White
- Silver Gray
- Medium Gray
- Pewter
- Shimmer Gray
- Textured Silver
- Deep Red
- Butterscotch
- Tuscan Sun
- Sage Green
- Parkers Blue
- Cornflower Blue
- Sand Fossil

Printed colors are approximate. Contact Lightway for physical finish samples.

Specify the DX Series

28435 Industry Drive., Valencia, California 91355
800-325-4448 / 661-257-0286
www.lightwayind.com • sales@lightwayind.com