LCLH-PATTERNS

Lobby of Children's Learning Academy / Diffuser P1004

Patterns, colors, and imagery are powerful tools for shaping ambiance and conveying identity. When thoughtfully integrated into lighting, they do more than illuminate—they enrich the environment with warmth, character, and purpose.

Lightway offers a versatile collection of pendant and flush-mounted ceiling fixtures, customizable with virtually unlimited design options. Whether it's patterns, branded imagery, or messaging, if you can envision it, Lightway can bring it to life—seamlessly blending your aesthetic vision into the lighting design.

Fixtures are available with **semi-translucent or opaque side diffusers**, allowing for tailored visual impact and light distribution. This flexibility ensures compatibility with a wide range of architectural styles and functional needs.

Proudly made in America, Lightway fixtures meet **Build America, Buy America (BABA)** standards—delivering exceptional craftsmanship, reliable performance, and full customization to suit your project requirements.

28435 Industry Drive., Valencia, California 91355
800-325-4448 /661-257-0286
www.lightwayind.com • sales@lightwayind.com

LCLH-PATTERNS

Type:	
Job Name:	

Construction:

- Choose a UV-stabilized, laminated side diffuser in a wide array of standard patterns or design your own pattern, message or company logo. Available with non-translucent or semi-translucent side lens options, this diffuser is expertly crafted to complement a range of aesthetic and functional design goals.
- By default, this fixture offers an assortment of arrays configured downward-facing on a shared chassis. For tailored distribution options, please contact the factory.
- The bottom diffuser features a white textured acrylic, providing a refined balance of soft diffusion and visual depth while maintaining an elegant, functional aesthetic. Let me know if you'd like alternative material options or adjustments to the description.
- The canopy and housing are expertly crafted from durable steel, enhanced with a sleek powder-coated finish for superior protection and modern appeal. The design is complemented by a high-quality acrylic lens, ensuring both functionality and refined aesthetics.

Shown with side diffuser P115

Light Source:

- LED
- Incandescent socket base

Notes:

- Mounting Kit Included for standard J-box
- Multiple canopy and stem options available.
- Custom overall heights available
- ***Build America, Buy America Act Compliant***
- UL and CUL listed **DAMP** location
- LED Array

Available in flush-mount version, please see LCLC-Patterns

- Replaceable Module
- CRI > 90
- Dimming (10% or 1%)
- Universal 120/277 volt standard
- 5-Year Warranty on LED Components

28435 Industry Drive., Valencia, California 91355
800-325-4448 /661-257-0286
www.lightwayind.com • sales@lightwayind.com

LCLH-LED

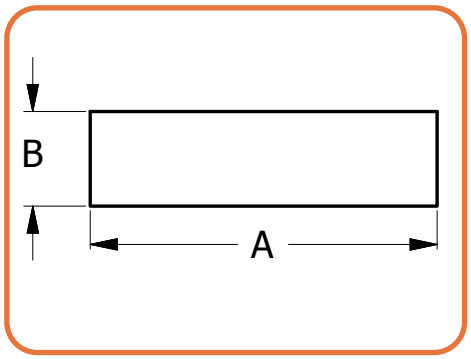

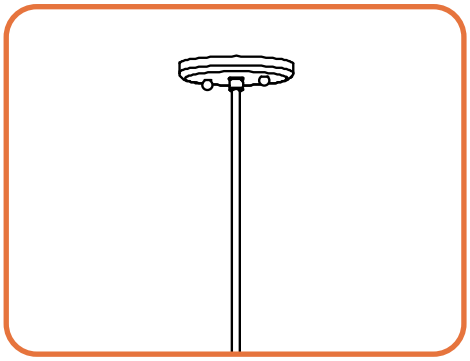

STEM OPTION -1S15

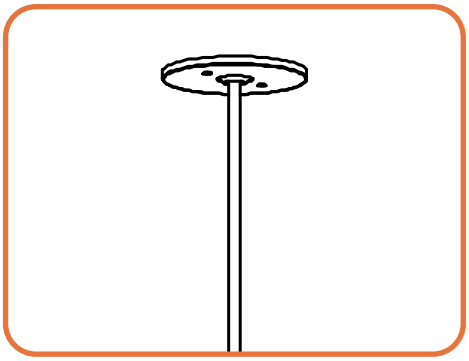

STEM OPTION -1SLM45

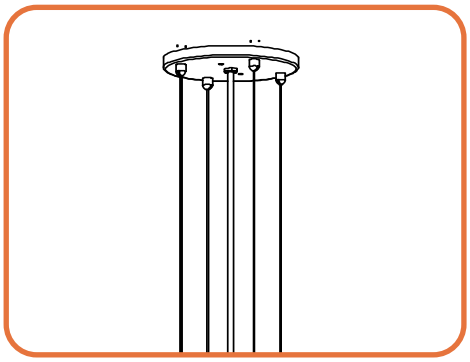

STEM OPTION -Aircraft Cable with Cord-(4AC-xSJ)

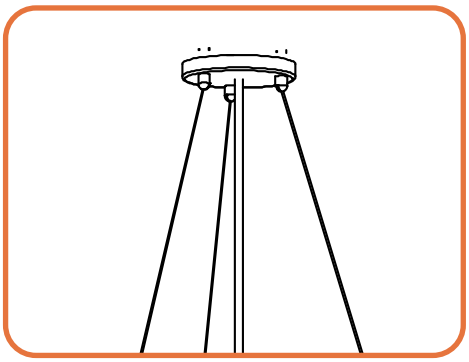

STEM OPTION -Aircraft Cable with Cord-(3AC-xSJ)

	DIM 'A'	DIM 'B'	OAH
LCLH-12	12.25″	4.5″	12″
LCLH-15	15″	4.5″	12″
LCLH-19	19″	5.25″	12″
LCLH-24	24″	8″	15″
LCLH-30	30″	8″	24″
LCLH-36	36″	8″	24″

LED BASED ORDERING INFORMATION

Example: LCLH-15-LED-F1K-4-W2-CV-P1004-1SLM45-12"OAH-DIM

LCLH [ ] [ ] [ ] [ ] [ ] [ ]

Size	LED	Watts	Source Lumens	Dimming	Energy Star
12-LED	**F1H**	9	1400	0-10v	YES
	F1O	10	863	TRIAC/ELV	YES
	F1P	15	1361	TRIAC/ELV	YES
15-LED	**F1K**	13	2115	0-10v	YES
	F1P	15	1361	TRIAC/ELV	YES
	F1Q	23	2057	TRIAC/ELV	YES
19-LED	**L1A**	36	4000	0-10v	NO
	F1Q	23	2057	TRIAC/ELV	YES
24-LED	**L1A**	36	4000	0-10v	NO
30-LED	**O4C**	36	4840	0-10v	NO
36-LED	**O8C**	72	9680	0-10v	NO
	O12C	107	14520	0-10v	NO
	O12C	107	14520	0-10v	NO

Kelvin

1 2700K
2 3000K
3 3500K
4 4000K
5 5000K

Finish

See Finish Options Page 5

Side Diffusers

Diffuser Options on Page 6

(CV##) Opaque/Solid
(Part numnber example: CV-P1004)
CV = Opaque/Solid side diffuser

(CT)## Semi-Translucent
(Part numnber example: CT-P1004)
CT = Semi-Tranlucent side diffuser

Options

(Suspension Systems)
Please list **O**ver **A**ll **H**eight
1S15 -Single Stem 15 degree swivel
1SLM45 -Single Stem 45 degree swivel
4AC-(4) Aircraft Cable
3AC -(3) Aircraft Cable
DIM LED dimming driver (0 - 10v)
DIMLD Line Voltage /TRIAC/ELV/120v
ES Energy Star listed components
T24 Title 24/JA8 Compliant
(F1O, F1P & F1Q configuration only)

OCCHFA Concealed Occupancy Sensor
See Sensor Resource Sheet

Battery Backup Options
(Available with 0-10v only)
Note available in LCLC-12
BB10 10 Watts (1170lm) for 90-Minutes

28435 Industry Drive., Valencia, California 91355
800-325-4448 /661-257-0286
www.lightwayind.com • sales@lightwayind.com

Revision: 05/26/2026

LCLH-E26

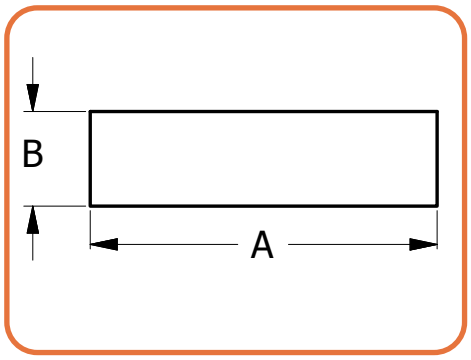

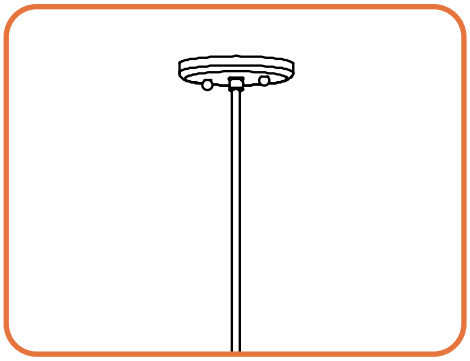

STEM OPTION -1S15

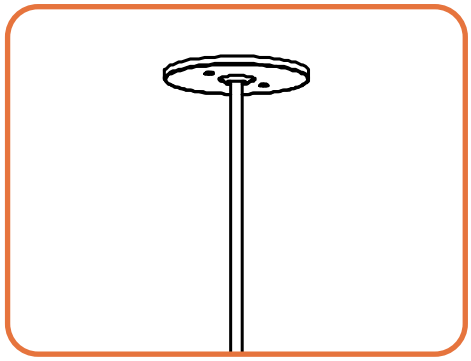

STEM OPTION -1SLM45

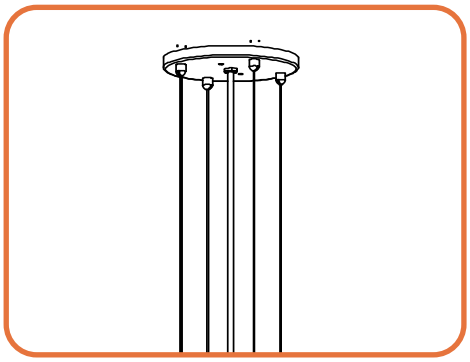

STEM OPTION -Aircraft Cable with Cord-(4AC-xSJ)

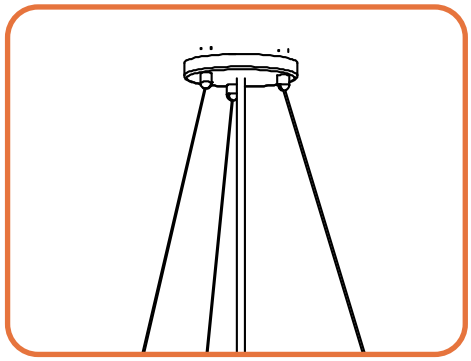

STEM OPTION -Aircraft Cable with Cord-(3AC-xSJ)

	DIM 'A'	DIM 'B'	OAH
LCLH-12	12.25″	4.5″	12″
LCLH-15	15″	4.5″	12″
LCLH-19	19″	5.25″	12″
LCLH-24	24″	8″	15″
LCLH-30	30″	8″	24″
LCLH-36	36″	8″	24″

INCANDESCENT BASED ORDERING INFORMATION

Example: LCLH-36-8E26-NL-W2-CV-P1004-1SLM45-24"OAH

LCLH				NL			

Size	Socket	Watts	Source Lumens	Dimming	Energy Star
12	2E26			TRIAC/ELV	
15	2E26			TRIAC/ELV	
19	3E26			TRIAC/ELV	
24	4E26			TRIAC/ELV	
30	8E26			TRIAC/ELV	
36					

Kelvin

NL
Lamps provided by others

Finish

See Finish Options Page 5

Side Diffusers

Diffuser Options on Page 6

(CV##) Opaque/Solid
(Part numnber example: CV-P1004)
CV = Opaque/Solid side diffuser

(CT)## Semi-Translucent
(Part numnber example: CT-P1004)
CT = Semi-Tranlucent side diffuser

Options

(Suspension Systems)
Please list **O**ver **A**ll **H**eight
1S15 -Single Stem 15 degree swivel
1SLM45 -Single Stem 45 degree swivel
4AC-(4) Aircraft Cable
3AC -(3) Aircraft Cable

CF - Center Finial

28435 Industry Drive., Valencia, California 91355
800-325-4448 /661-257-0286
www.lightwayind.com • sales@lightwayind.com

FINISHES

Standard Finishes

W1 Yolk

W2 Gloss White

W3 Textured White

W13 Pearl Beige

B1 Satin Black

B2 Textured Black

Z3 Textured Bronze

Z1 Satin Bronze

M13 Anodized Silver

T4 Shimmer Gray

T6 Pewter

T1 Silver Gray

T5 Textured Silver

M17 Brass Powder

Premium Finishes - Contact Factory For Pricing

U12 Parkers Blue

U13 Cornflower Blue

A15 Medium Gray

G13 Sage Green

W18 Sand Fossil

R4 Deep Red

M20 Tuscan Sun

D12 Butterscotch

DISCLAIMER:
Colors displayed on your screen may vary slightly from the actual product color due to differences in monitor calibration and lighting conditions. Sample chips are available upon request. **Not all finishes are available with all fixtures. Please consult factory for premium finishes.**

28435 Industry Drive., Valencia, California 91355
800-325-4448 /661-257-0286• fax 800-323-2346 /661-257-0201
www.lightwayind.com • sales@lightwayind.com

DIFFUSER PATTERNS

#P100

#P101

#P102

#P103

#P104

#P105

#P106

#P107

#P108

#P109

#P110

#P111

#P112

#P113

#P114

#P115

DISCLAIMER:

Colors displayed on your screen may vary slightly from the actual product color due to differences in monitor calibration and lighting conditions. Sample chips are available upon request. Not all finishes are available with all fixtures. Please consult factory for premium finishes.

28435 Industry Drive., Valencia, California 91355
800-325-4448 /661-257-0286
www.lightwayind.com • sales@lightwayind.com

Lightway

Revision: 05/26/2026

DIFFUSER PATTERNS

#P116

#P117

#P118

#P119

#P120

#P121

#P122

#P123

#P124

#P125

#P126

#P127

#P128

#P129

#P130

#P131

DISCLAIMER:

Colors displayed on your screen may vary slightly from the actual product color due to differences in monitor calibration and lighting conditions. Sample chips are available upon request. Not all finishes are available with all fixtures. Please consult factory for premium finishes.

28435 Industry Drive., Valencia, California 91355
800-325-4448 /661-257-0286
www.lightwayind.com • sales@lightwayind.com

Revision: 05/26/2026

DIFFUSER PATTERNS

#P132

#P133

#P134

#P135

#P136

#P137

#P138

#P139

#P140

#P141

#P142

#P143

#P144

#P145

Custom

DISCLAIMER:

Colors displayed on your screen may vary slightly from the actual product color due to differences in monitor calibration and lighting conditions.
Sample chips are available upon request. Not all finishes are available with all fixtures. Please consult factory for premium finishes.

28435 Industry Drive., Valencia, California 91355
800-325-4448 /661-257-0286
www.lightwayind.com • sales@lightwayind.com

Lightway

Revision: 05/26/2026

DIFFUSER PATTERNS

#P1000

#P1001

#P1002

#P1003

#P1004

#P1005

#P1006

#P1030

#P1031

#P1032

#P1033

#P1034

Custom

DISCLAIMER:

Colors displayed on your screen may vary slightly from the actual product color due to differences in monitor calibration and lighting conditions.
Sample chips are available upon request. Not all finishes are available with all fixtures. Please consult factory for premium finishes.

28435 Industry Drive., Valencia, California 91355
800-325-4448 /661-257-0286
www.lightwayind.com • sales@lightwayind.com

Lightway

Revision: 05/26/2026